TEMPOMATIC urinal valve

Ref. 428150

Electronic mains supply

DESCRIPTION

TEMPOMATIC urinal valve - **Ref. 428150**

Cross wall electronic urinal valve:
Mains supply, electronic control unit 12V with solenoid valve, filter and stopcock M½".
Cross wall installation for walls ≤ 155mm.
Shock-resistant infrared presence detector.
Detection distance, time flow and flow rate can be adjusted during installation.
Order the 230/12V transformer separately.
Presence detection delay is 3 sec.
Automatic pre-rinse possible.
Time flow 3 seconds, can be adjusted from 3 - 12 sec.
Hygienic duty flush every 24 hours after last use, prevents vacuums.
Flow rate 0.3 L/sec. at 3 bar pressure, can be adjusted.
Wall plate flush to the wall.
Threaded rods can be cut-to-size.
Compatible with rain water.
Suitable for people with reduced mobility.
30-year warranty.

ADVANTAGES

- Total hygiene: no manual contact
- ECO time flow set at 3 seconds
- Cross wall installation
- Hygienic duty flush

TECHNICAL CHARACTERISTICS

TEMPOMATIC urinal valve - **Ref. 428150**
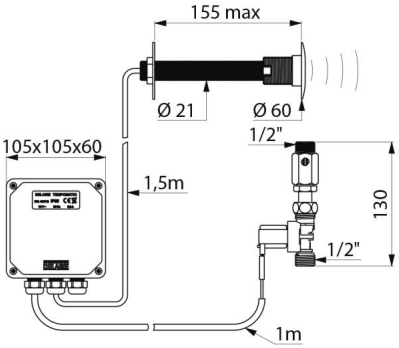
Supply	12V mains supply
Connector	½"
Technology	Electronic
Length	155mm
Flow rate	0.3 l/sec.
Norms	
Warranty	30 YEAR WARRANTY