Twin hole pre-rinse set with mixer

Ref. 5680

Without bib tap

DESCRIPTION

Twin hole pre-rinse set with mixer - Ref. 5680

Complete pre-rinse set without bib tap suitable for intensive use in professional kitchens.
Deck-mounted twin hole mixer with 150mm centres with:
- valve heads with reinforced mechanisms with ergonomic control levers.
- offset inlet connections with M1/2" tails.
Black hand spray with adjustable jet and 9 lpm flow rate at the outlet (ref. 433010).
Scale-resistant hand spray and shock-resistant tip.
Black reinforced, food-grade flexible hose L. 0.95m.
3/4" stainless steel column.
Adjustable wall bracket.
Stainless steel spring guide.
Twin hole pre-rinse set with 30-year warranty.
These pre-rinse models can be installed close to the splashback.

ADVANTAGES

- Anti-torsion rotating nuts and PVC sheath
- Comfort: ergonomic controls
- Hygiene: PVC flexible, scale-resistant spray
- Increased resistance: high quality flexible

TECHNICAL CHARACTERISTICS

Twin hole pre-rinse set with mixer - Ref. 5680
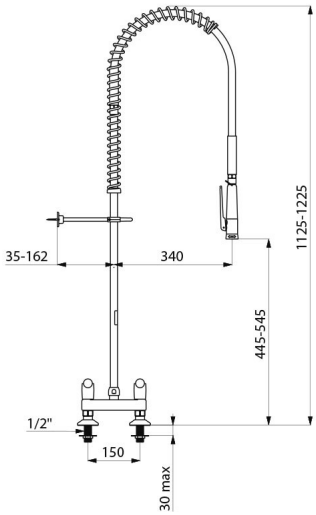
Connector	M1/2"
Height	1125 - 1225mm
Drop height	445 - 545mm
Flow rate	9 lpm via the hand spray
Width to the wall	35 - 162mm
Finish	Stainless steel
Norms	ACS, BELGAQUA
Warranty	30 YEAR WARRANTY
Repairability	50 YEARS REPAIRABILITY