Mechanical basin mixer

Ref. 2445

Wall-mounted mixer with swivel spout L .200mm, sculptured lever

DESCRIPTION

Mechanical basin mixer - Ref. 2445

Wall-mounted mechanical basin mixer.
Mechanical mixer with flat, swivelling under spout L. 200mm with hygienic flow straightener.
Spout suitable for fitting a BIOFIL point-of-use filter.
Securitouch thermal insulation prevents burns.
Ø 40mm standard ceramic cartridge with pre-set maximum temperature limiter.
Body and spout with smooth interiors and low water volume.
Flow rate 5 lpm 3 bar.
Chrome-plated brass body.
Sculptured control lever.
Mixer with 150mm centres, supplied with offset STOP/CHECK wall connectors M1/2" M3/4" ideal for hospitals.
Recommended installation height: 110 - 200mm above the basin surface.
Mechanical mixer ideal for healthcare facilities, retirement and care homes. hospitals and clinics.
Mixer suitable for people with reduced mobility.
Wall-mounted mixer with 30-year warranty.

ADVANTAGES

- Hygiene: smooth interior reduces bacteria
- Pre-set maximum temperature limiter
- Securitouch thermal insulation prevents burns
- Ergonomic sculptured control lever is easy to grip

TECHNICAL CHARACTERISTICS

Mechanical basin mixer - Ref. 2445
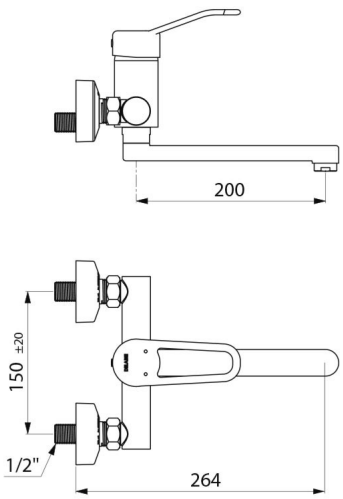
Connector	M1/2"
Technology	Securitouch
Spout length	200mm
Flow rate	5 lpm
Temperature limiter	YES
Finish	Chrome-plated
Norms	ACS, WRAS, DVGW,
Warranty	30 YEAR WARRANTY
Repairability	50 YEARS REPAIRABILITY