SECURITHERM EP pressure-balancing sink mixer

Ref. 2871T3EP

High single hole, single control mixer with EP cartridge



DESCRIPTION

SECURITHERM EP pressure-balancing sink mixer - Ref. 2871T3EP

Deck-mounted, tall basin mixer with SECURITHERM pressure-balancing.
Single hole, single control mixer with high, swivelling spout H. 320mm.
Mixer supplied with 1 removable, disposable spout.
Anti-scalding safety: reduced HW flow if CW supply fails (and vice versa).
Constant temperature regardless of pressure or flow rate variations.
Ø 35mm ceramic cartridge with pressure-balancing and pre-set maximum temperature limiter.
Body and spout with smooth interiors (limits bacterial development).
Thermal shocks are possible without removing the control lever or shutting off the cold water supply.
Flow rate limited to 9 lpm at 3 bar.
Chrome-plated brass body and base.
Hygiene control lever L. 185mm requires no manual contact.
PEX flexibles F3/8" with filters and non-return valves.
Fixing reinforced via 2 stainless steel rods.
Mixer ideal for healthcare facilities, retirement and care homes, hospitals and clinics.
Suitable for people with reduced mobility.
30-year warranty.

ADVANTAGES

- Hygiene: smooth interior reduces bacteria
- Thermal shock feature; no need to remove the lever
- Pre-set maximum temperature limiter
- Hygiene control lever requires no manual contact

TECHNICAL CHARACTERISTICS

SECURITHERM EP pressure-balancing sink mixer - Ref. 2871T3EP

Connector	F3/8"
Technology	BIOCLIP
Drop height	320mm
Spout length	180mm
Flow rate	9 lpm
Finish	Chrome-plated brass
Norms	ACS, BELGAQUA
Warranty	30 YEAR WARRANTY
Repairability	50 YEARS REPAIRABILITY

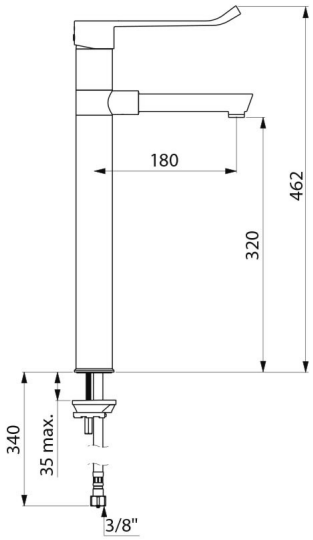

© DELABIE